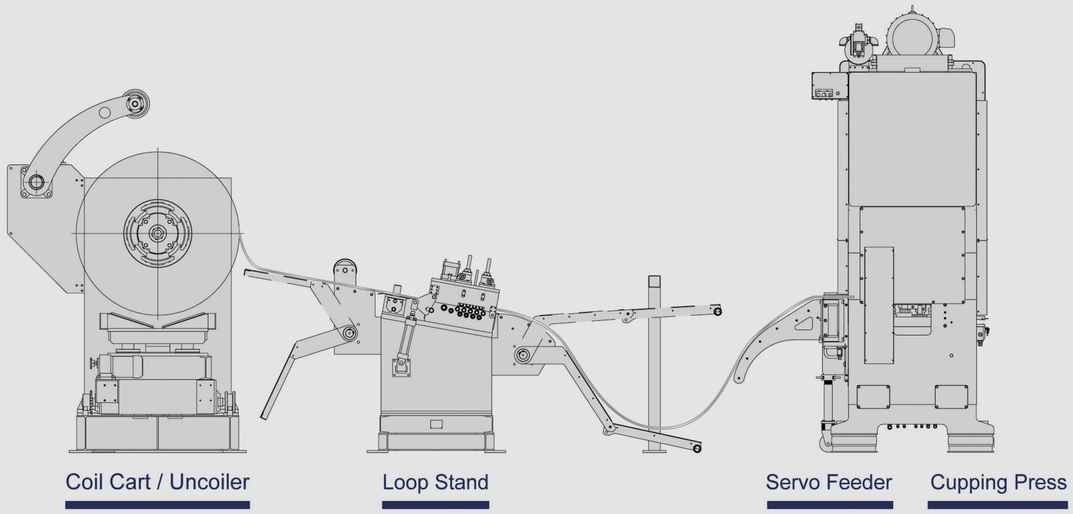
Coil Cart / Uncoiler
Loop Stand
Servo Feeder
Cupping Press

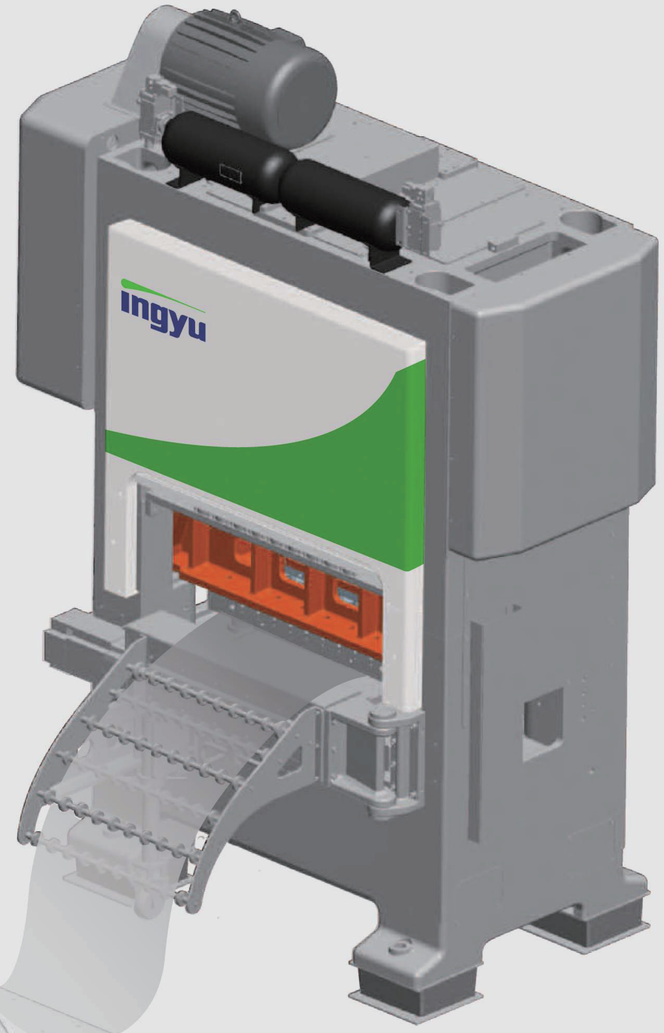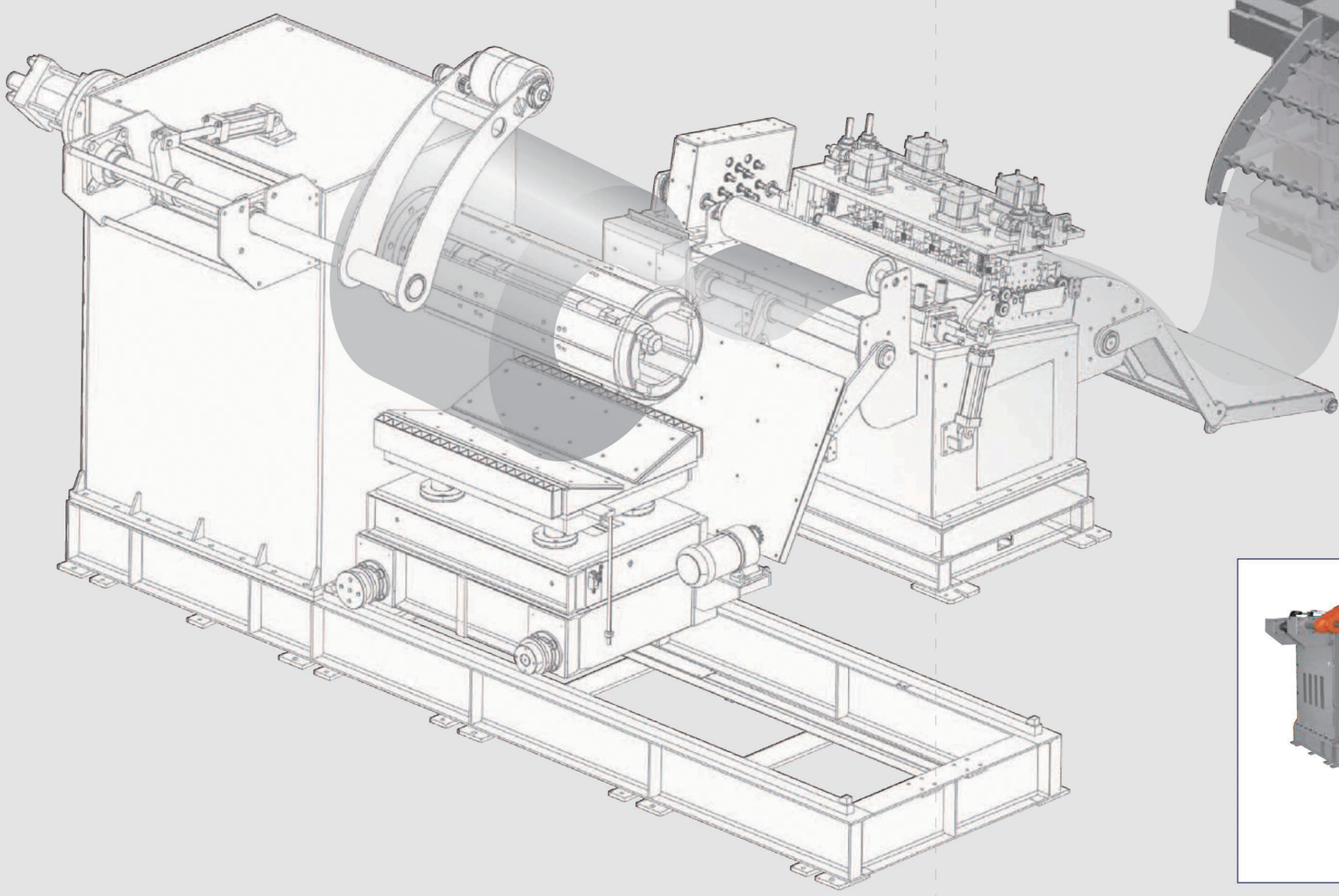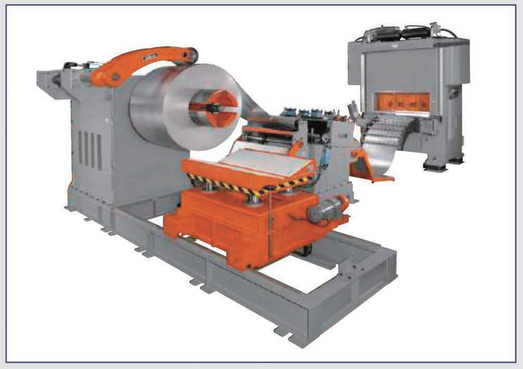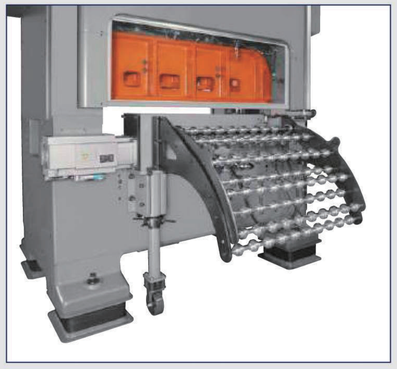
ingyu